Microcontroller

File: Microcontroller.kicad_sch

Display

File: Display.kicad_sch

SD Card Connector

File: SD Card Connector.kicad_sch

Overview

File: Overview.kicad_sch

Power

File: Power.kicad_sch

Sheet: /
File: PCB UI ESP32.kicad_sch

Title:

Size: A4	Date:	**Rev:**
KiCad E.D.A. 9.0.0		Id: 1/6

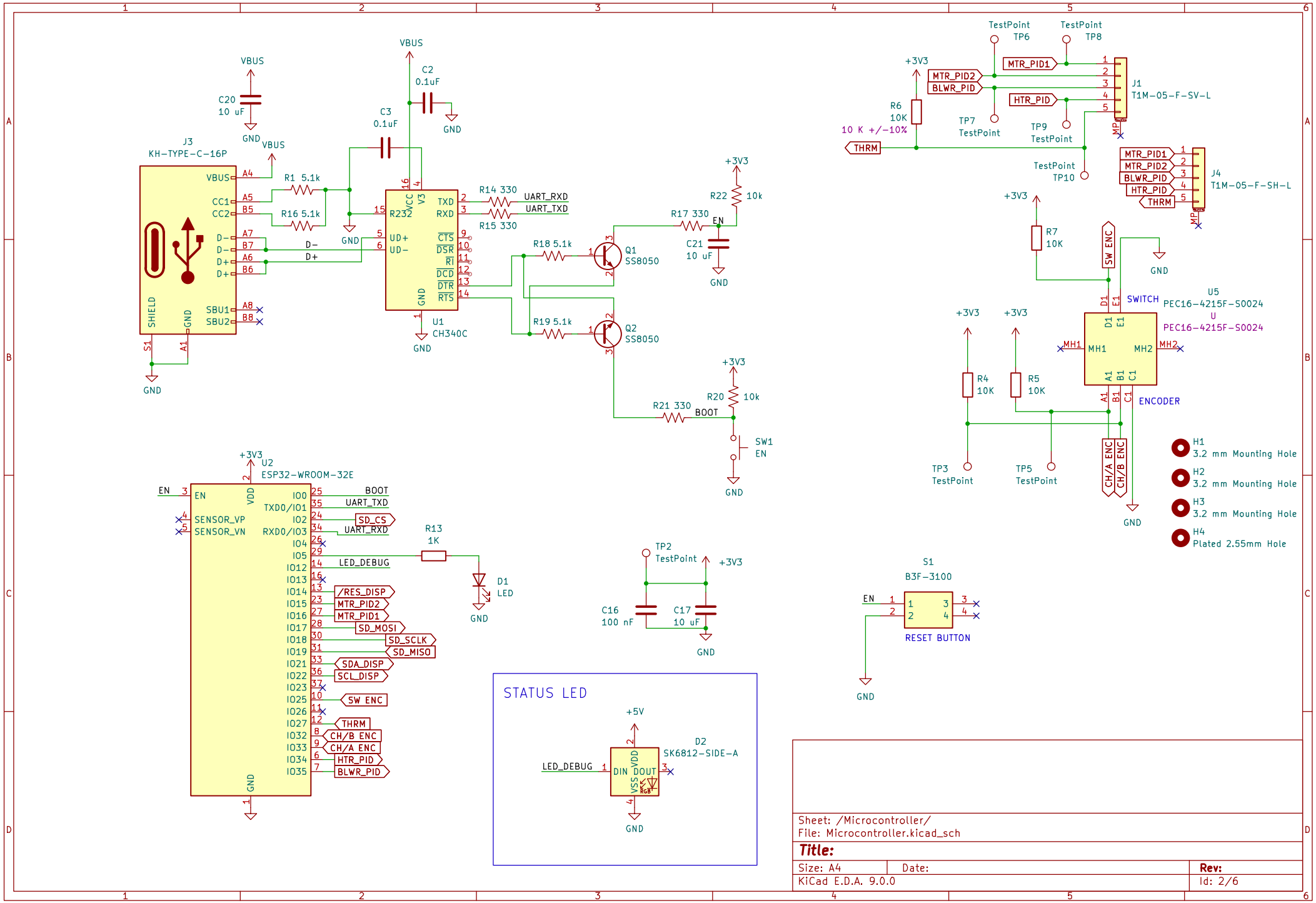

Sheet: /Microcontroller/
File: Microcontroller.kicad_sch

Title:

Size: A4	Date:	Rev:
KiCad E.D.A. 9.0.0		Id: 2/6

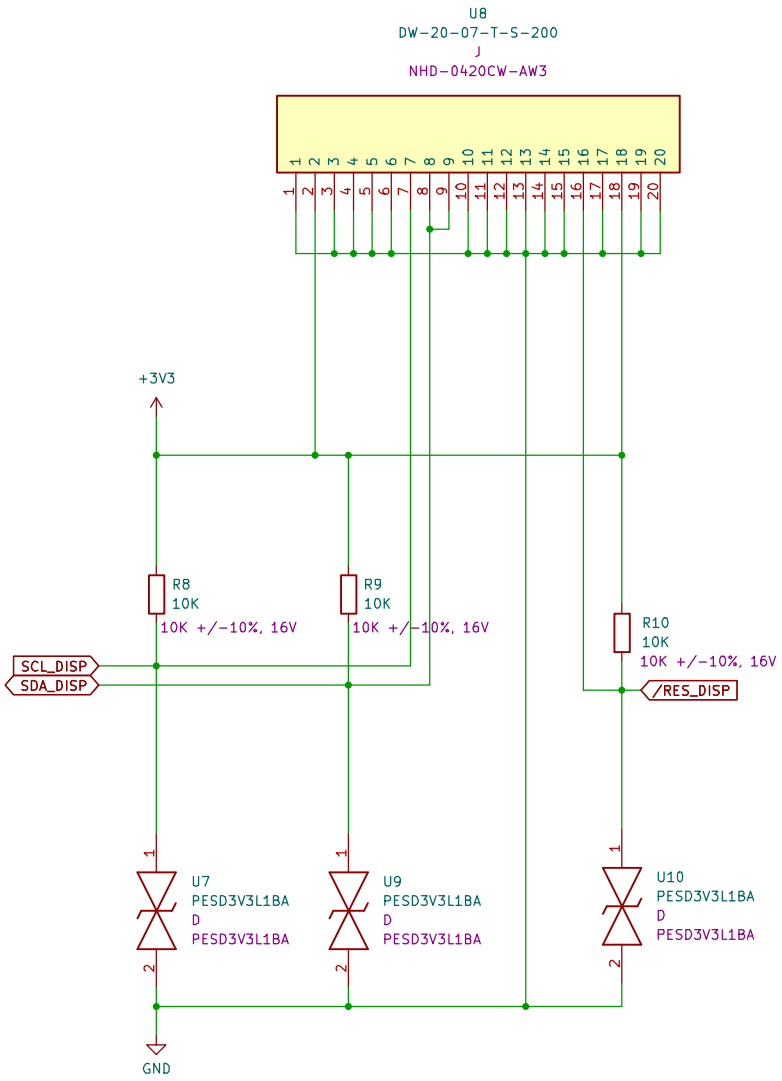

Sheet: /Display/
File: Display.kicad_sch

Title:

Size: A4	Date:	**Rev:**
KiCad E.D.A. 9.0.0		Id: 3/6

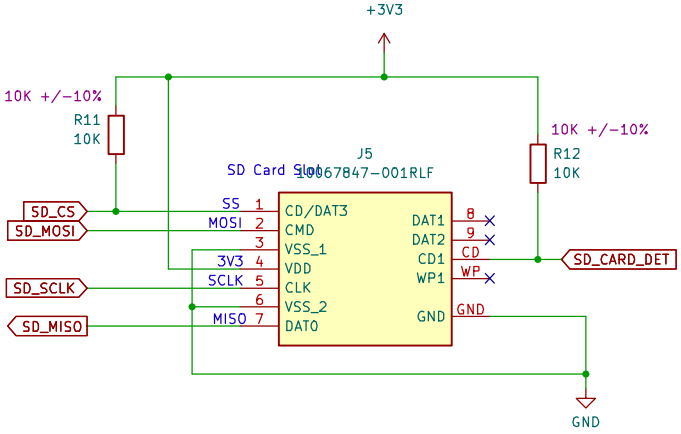

Sheet: /SD Card Connector/
File: SD Card Connector.kicad_sch

Title:

Size: A4	Date:	**Rev:**
KiCad E.D.A. 9.0.0		Id: 4/6

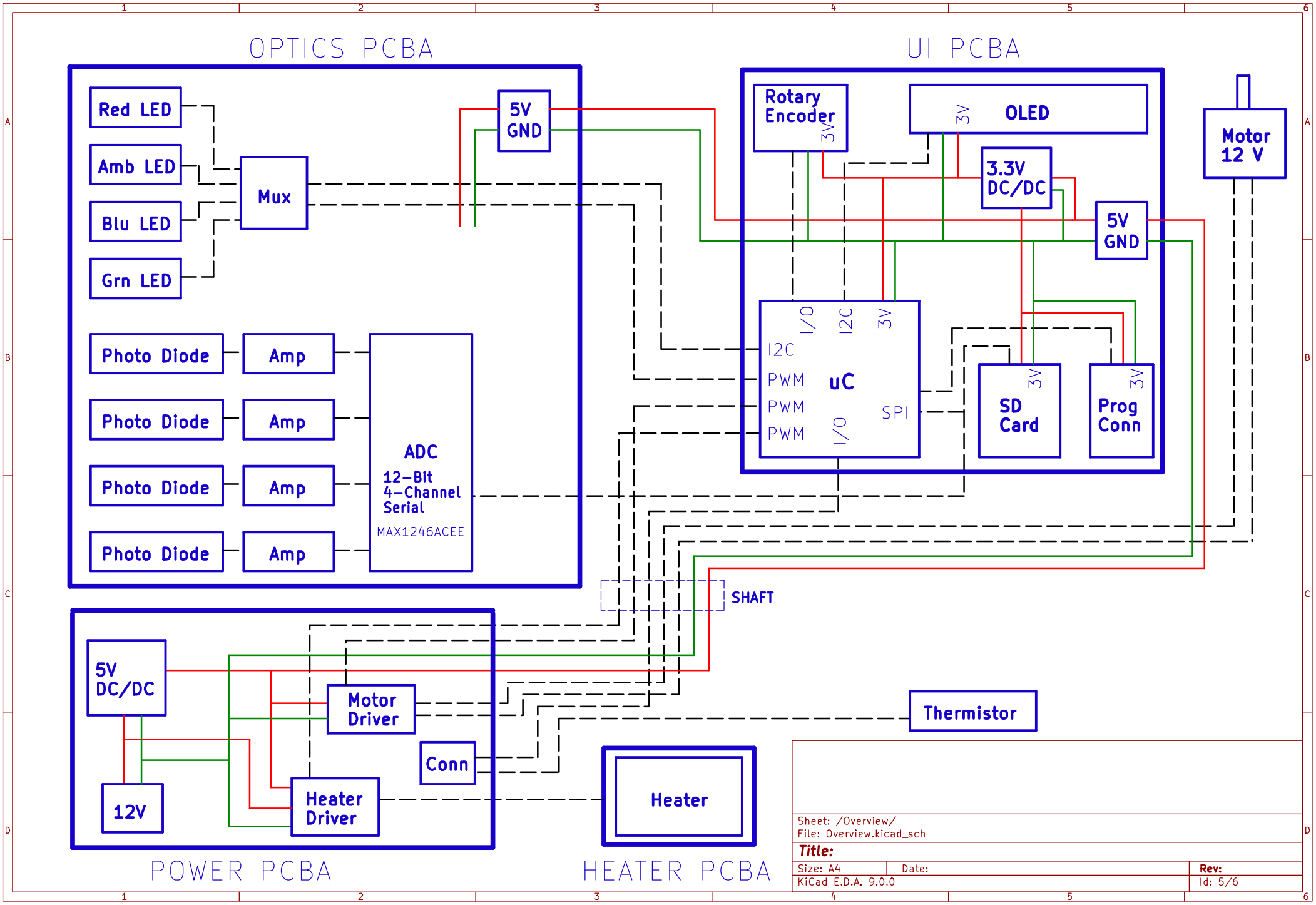
OPTICS PCBA
Red LED
Amb LED
Blu LED
Grn LED
Mux
5V
GND
Photo Diode
Amp
Photo Diode
Amp
Photo Diode
Amp
Photo Diode
Amp
ADC
12-Bit
4-Channel
Serial
MAX1246ACEE
UI PCBA
Rotary
Encoder
3V
OLED
3V
3.3V
DC/DC
5V
GND
I/O
I2C
3V
I2C
PWM
PWM
PWM
uC
SPI
I/O
SD
Card
3V
Prog
Conn
3V
Motor
12 V
SHAFT
5V
DC/DC
Motor
Driver
Conn
Heater
Driver
12V
POWER PCBA
Thermistor
Heater
HEATER PCBA
Sheet: /Overview/
File: Overview.kicad_sch
Title:
Size: A4
Date:
Rev:
KiCad E.D.A. 9.0.0
Id: 5/6

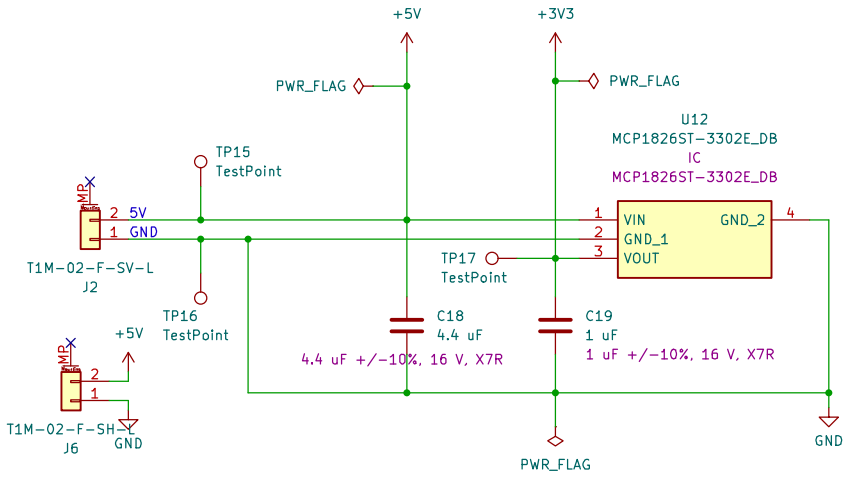

Sheet: /Power/
File: Power.kicad_sch

Title:

Size: A4	Date:	**Rev:**
KiCad E.D.A. 9.0.0		Id: 6/6